SECOND AMENDMENT TO MASTER DEED

43 NORTH

(Act 59, Public Acts of 1978 as amended)

Wolven Investments, LLC, a Michigan limited liability company of 3115 Railway Drive, Byron Center, Michigan 49315, as Developer of 43 North, a condominium project established pursuant to the Master Deed thereof recorded on November 13, 2014, at Instrument No. 20141113-0094509, Kent County, Michigan records, and First Amendment to Master Deed of 43 North recorded on November 10, 2020, at Instrument No. 20201110-0106755, Kent County, Michigan records (collectively, the "**Master Deed**"), being Kent County Condominium Subdivision Plan No. 982 (the "**Project**"), pursuant to Section 90 of the Michigan Condominium Act and the provisions of Article IX of the Master Deed, hereby amends the Master Deed in accordance with this Second Amendment to Master Deed (the "**Second Amendment**") for purpose of amending the minimum building openings (MBO's) of Units 30, 31, and 32, and revising the Condominium Subdivision Plan consistent with the same. To accomplish these purposes, the Master Deed is amended as follows:

AMENDMENT

1. Section 6.2.9 of Article VI of the Bylaws, entitled "Minimum Building Opening Elevations," is deleted in its entirety and replaced with the following provisions:

> "6.2.9 Minimum Building Opening Elevations. The residences constructed upon Units 4, 5, 6, 7, 8, 14, 15, and 26 through 43, inclusive, shall comply with the minimum building opening elevation requirements noted on Sheets 5 and 6 and Revised Sheet 7 of Replat No. 1 to the Condominium Subdivision Plan, Revised Sheet 7 being attached as Exhibit "B" to this Second Amendment."

2. The Condominium Subdivision Plan attached to the Master Deed as Exhibit B, is hereby amended by replacing and superseding Sheet 7 of Replat No. 1 of Kent County Subdivision Plan No. 982, with Revised Sheet 7 of Replat No. 1 attached hereto as **Exhibit B**.

3. Capitalized terms not defined in this Second Amendment shall have the meanings assigned to such terms in the Master Deed.

4. Except as specifically amended and modified by this Second Amendment, all provisions of the Master Deed shall remain in full force and effect.

5. In the event of a conflict or inconsistency between the terms of this Second Amendment and the terms of the Master Deed, the terms of this Second Amendment shall govern.

[*the remainder of this page is intentionally blank*]

This Second Amendment to Master Deed was duly executed on June 18, 2021.

DEVELOPER:

WOLVEN INVESTMENTS, LLC, a Michigan limited liability company

By: KENSINGTON REALTY GROUP, INC., a Michigan corporation, its Manager

By: _____
Dale H. Kraker
Its: President

Acknowledged before me by Dale H. Kraker, President of Kensington Realty Group, Inc., a Michigan corporation, the Manager of Wolven Investments, LLC, a Michigan limited liability company, on behalf of the company, in Kent County, Michigan, on June 18th, 2021.

_____
_____, Notary Public
Kent County, Michigan
Acting in Kent County, Michigan
My commission expires: Mar. 26, 2027

TRACY M PIERCE
Notary Public - State of Michigan
County of Ottawa
My Commission Expires Mar 26, 2027
Acting in the County of Kent

EXHIBIT A

AFFIDAVIT OF MAILING

Dale H. Kraker, being duly sworn, deposes and says that:

1. He is President of Kensington Realty Group, Inc., a Michigan corporation, the Manager of Wolven Investments, LLC, a Michigan limited liability company, the Developer of 43 North (the "**Project**"), a condominium project located in Kent County, Michigan.

2. On June 18, 2021, notice of the Second Amendment to Master Deed of the Project was sent to all Co-owners of record in the Project as required by Section 90(5) of the Michigan Condominium Act, pursuant to the Co-owners roster maintained by the Developer. Such notices were sent by first class mail, postage fully prepaid.

Further deponent saith not.

Dale H. Kraker

Acknowledged before me by Dale H. Kraker in Kent County, Michigan, on June 18th, 2021.

Notary Public, Kent County, Michigan
Acting in Kent County, Michigan
My commission expires: Mar. 26, 2027

TRACY M PIERCE
Notary Public - State of Michigan
County of Ottawa
My Commission Expires Mar 26, 2027
Acting in the County of Kent

DRAFTED BY:

TODD A. HENDRICKS (P45782)
RHOADES McKEE PC
55 Campau Ave. NW, Suite 300
Grand Rapids, MI 49503

Exhibit B

43 NORTH

UTILITY AND EASEMENT PLAN

SHEET 7 of 9
(REVISED)

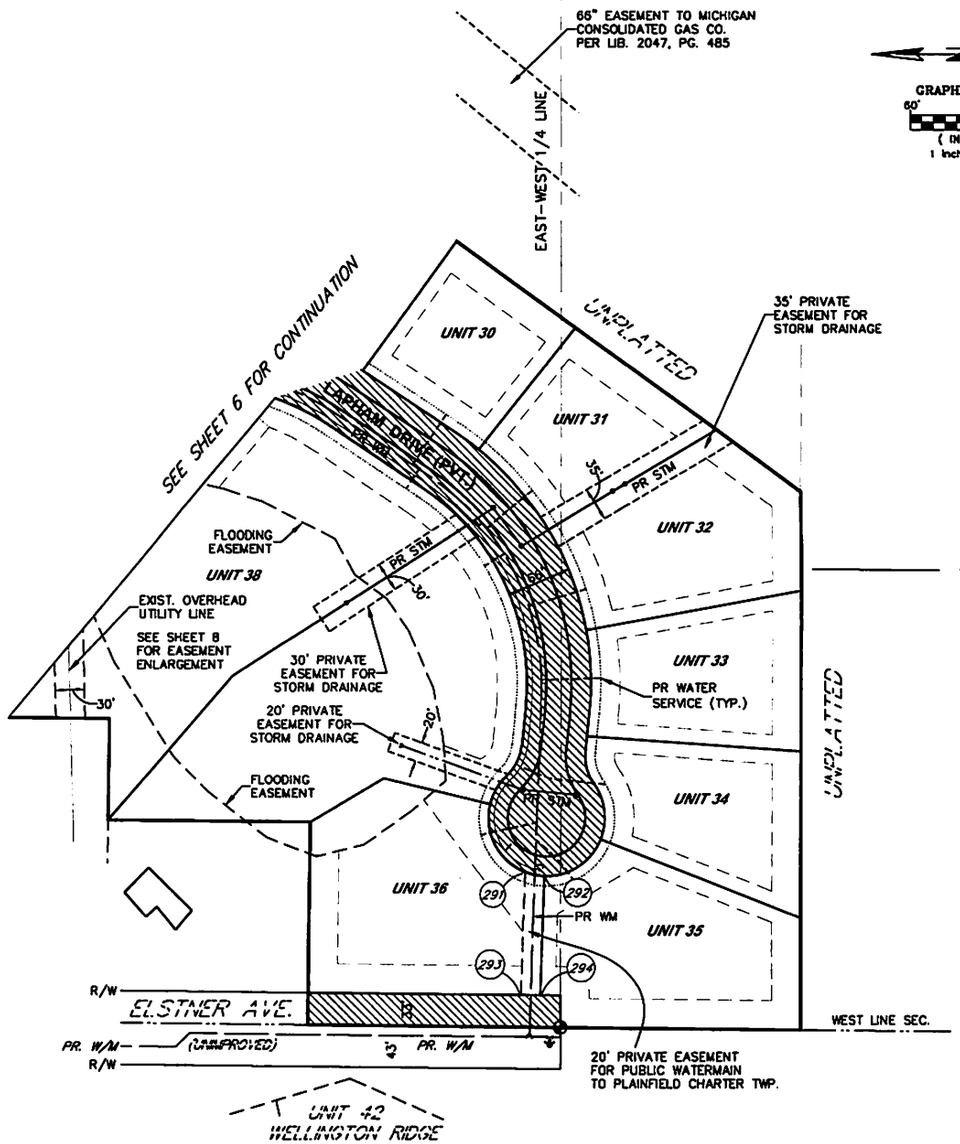

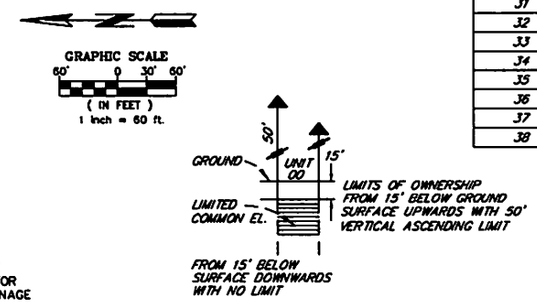

MBO TABLE	
UNIT NO.	MBO
30	854.0
31	852.0
32	852.0
33	850.0
34	845.0
35	845.0
36	845.0
37	847.0
38	847.0

TABLE OF POINTS		
Point #	Northing	Easting
291	2384.355	5132.434
292	2364.482	5128.332
293	2388.605	5006.161
294	2368.600	5005.955

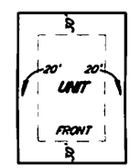

TYP. UNIT SETBACK FOR UNITS 1-25
(EXCEPT AS SHOWN ON PLAN)

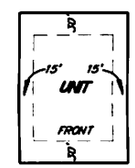

TYP. UNIT SETBACK FOR UNITS 26-43
(EXCEPT AS SHOWN ON PLAN)

LEGEND

- GENERAL COMMON ELEMENT
- DRAINAGE EASEMENT
- LIMITS OF OWNERSHIP
- 10' PRIVATE EASEMENT FOR PUBLIC UTILITIES
- STORM SEWER
- WATERMAIN

STORM WATER MANAGEMENT SYSTEM IS A NEED NOT BE BUILT ITEM

TELEPHONE, ELECTRIC, CABLE, AND GAS UTILITIES ARE NEED NOT BE BUILT ITEMS

WATERMAIN AND SERVICE LATERALS ARE NEED NOT BE BUILT ITEMS

SIDEWALK IS A NEED NOT BE BUILT ITEM

PRIVATE ROADS ARE NEED NOT BE BUILT ITEMS

M.B.O. = MINIMUM BUILDING OPENING ELEVATION

Roosien & Associates
SURVEYING AND ENGINEERING
5055 PLAINFIELD AVE. NE TELE. (616) 361-7220
GRAND RAPIDS, MI 49525 FAX (616) 361-1822
FILE # 200042-C7

STATE OF MICHIGAN
KEVIN ROOSIEN
LAND SURVEYOR
No. 31604
PROFESSIONAL SURVEYOR

PROPOSED
KEVIN ROOSIEN, P.S. NO. 31604

JUNE 17, 2021
DATE